ADVANCED AFFILIATES

L-6 Series 3-Color LED Under Cabinet Light: Installation Instructions

Models L-609 (9"), L-614 (14"), L-622 (22"), L-632 (32") · Plug-in or hard wire · Linkable

WARNING: For your safety, read these instructions completely before starting installation. Turn power OFF at the circuit breaker before installing or servicing. Shock hazard may result in serious injury or death.

Safety & Warnings

- Wire the fixture in accordance with the National Electrical Code and all applicable local codes. Proper grounding is required for safety.
- Installation should be done by a licensed electrician or a person familiar with the construction and operation of the product's electrical system and the hazards involved. If in doubt, contact a qualified licensed electrician.
- For general indoor **dry locations** only.
- Linkable up to **500 watts maximum** on one linked run.
- Do not touch the LED light engine or heat sink.
- Keep a **12-inch minimum distance** between the fixture and any object below it.
- To prevent overheating, do not install the fixture in small enclosed spaces.
- Do not install where the room temperature is outside -4°F to 113°F (-20°C to 45°C).
- For dimming, use a dimmer from the Dimmer Compatibility List on the last page.

In the Box

- L-6 LED under cabinet light with 2 captive mounting screws (pre-installed on the fixture)
- 3/8" Romex connector and push-in wire connectors for hard wiring

Sold separately: 6 ft plug-in power cord; 12" and 18" link cords for connecting additional L-6 fixtures.

Switches and Colors

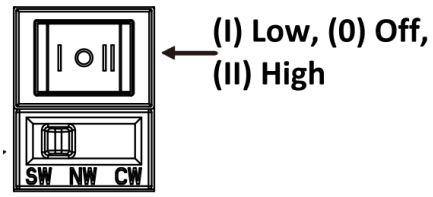

Rocker switch: (I) Low, (0) Off, (II) High. **Color slide switch:** SW soft white 2700K, NW neutral white 3500K, CW cool white 4000K. **Dimming:** the fixture dims in the High (II) setting only, with a compatible dimmer.

Plug-In Installation

Skip this section if you are hard wiring.

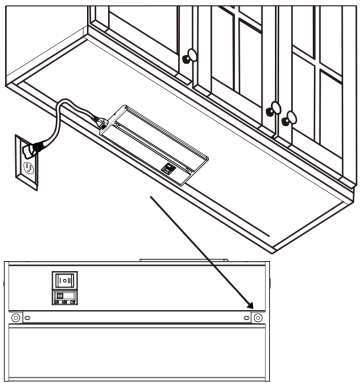

1. Hold the fixture in the mounting location. It must be within reach of the 6 ft power cord from an outlet; leave about 2-1/2" of clearance at the end for the cord. Tighten the captive mounting screws until the fixture is secure. If the screws are hard to drive, mark the holes and drill pilot holes no larger than 1/16".
2. Remove the terminal cover screw from the end of the fixture marked "IN".
3. Plug the power cord into the "IN" connector. It only fits the "IN" connector; do not force it, it should slide in easily.
4. Once mounted, plug the cord into the outlet and turn the light on with the rocker switch: Low (I), Off (0) or High (II). Choose the color with the slide switch.

Hard Wire Installation

Skip this section if you are using the plug-in power cord.

1. **Turn power OFF at the circuit breaker.**
2. Decide where to install the fixture(s). Place and level the fixture in position.
3. Open the wiring compartment, using option A or B. Punch out whichever knock-out is best for the 120 V AC supply wires.
   Option A, rear access door knock-out (Fig. 1): remove the knock-out with a punch tool (not supplied). Loosen and remove the rear access door screw and take off the door.

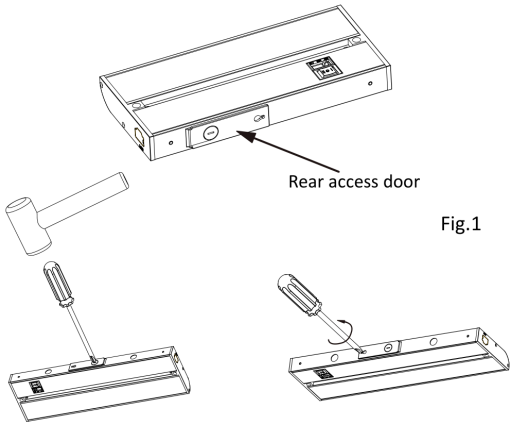

Fig.1

   Option B, alternative knock-outs (Fig. 2): knock-outs are located along the back and top of the housing. When using them, remove the wiring compartment cover: take out the two screws at each end with a Phillips screwdriver and set the cover aside.

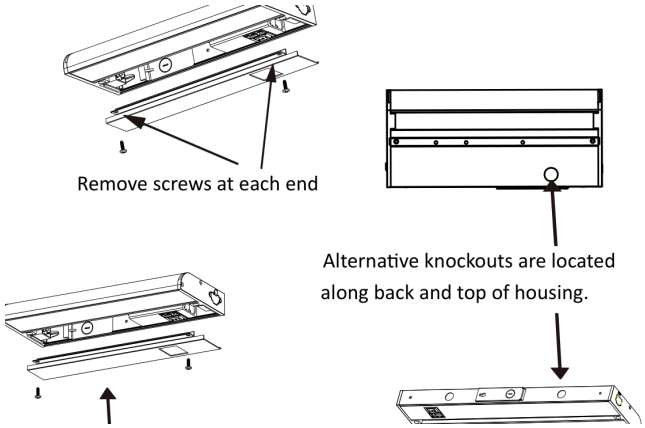

4. **Attach wiring (Fig. 3).** Feed Romex (NM) or BX cable through the included Romex connector and attach the connector to the fixture. Connect line (black) to black, neutral (white) to white, and ground to green. The push-in wire connectors are only for **12 AWG wire**; with thinner wire, cut off the push-in connectors and use standard UL listed wire nuts. Replace the rear access door (or wiring compartment cover) and secure it with its screw. Be sure no wires are pinched or damaged by the housing or cover.

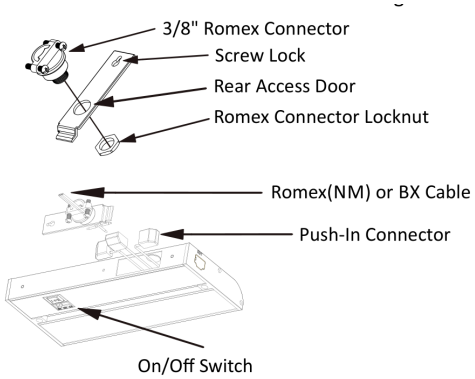

Mounting and Linking

5. **Mount the fixture.** Position it and tighten the two captive mounting screws with a Phillips screwdriver or driver bit. They are already installed in the fixture, so there are no loose screws. The captive screws are for cabinet bottoms **1/2 inch or thicker**; use shorter screws for thinner cabinet bottoms.

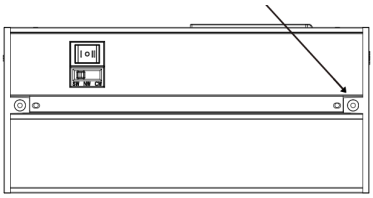

Linking more fixtures: connect the next fixture with a 12" or 18" link cord (sold separately) from the "OUT" connector of the first fixture to the "IN" connector of the next. The next fixture must be within the length of the cord. Keep the whole linked run at **500 watts or less**. Each fixture keeps its own switches. Make sure all terminal covers are attached to any open ports when you are done.

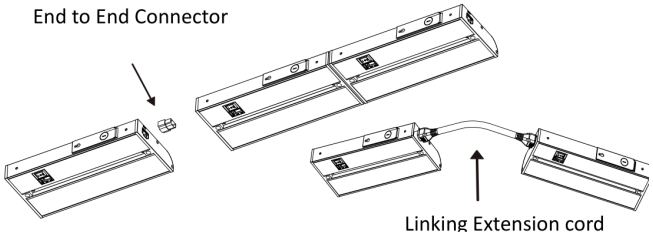

6. Check all connections, then turn the power back ON at the circuit breaker.

Dimmer Compatibility List

Dims in the High (II) setting only. Load ratings are the dimmer's own ratings.

Brand	Series	Model	Dims down to
Lutron	Ariadni CL	AYCL-153P, AYCL-253P	30%
Lutron	Skylark Contour CL	CTCL-153P	10%
Lutron	Diva CL	DVCL-153P, DVCL-253P, DVSCCL-153P, DVSCCL-253P	10%
Lutron	Lumea CL	LECL-153PH	10%
Lutron	Maestro CL	MACL-153M, MACL-153M-RHW	10%
Lutron	Maestro Wireless	MRF2-6CL, MRF2S-6CL (Vive)	10%
Lutron	Nova T CL	NTCL-250	10%
Lutron	Caseta Wireless	PD-5NE, PD-6WCL, P-PKG1W-WH, P-BDG-PKG1W, P-BDG-PKG2W	10%
Lutron	RadioRA 2	RRD-6CL	10%
Lutron	Skylark CL	SCL-153P	10%
Leviton	SureSlide	6672, 6674	10%
Leviton	Decora	DSL06-1LZ, DSM10-1LZ	10%
Leviton	IllumaTech	IPL06-10Z	10%
Leviton	Toggle Slide	TSL06-1L	10%